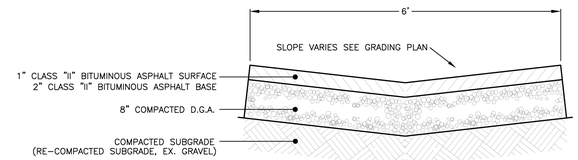

J / C-1 PAVED DITCH DETAIL

SCALE: N.T.S.

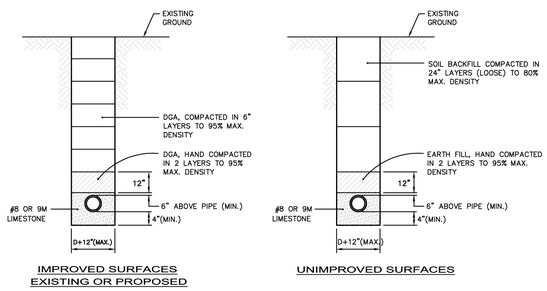

K / C-3 & C-4A,B PIPE TRENCH BACKFILL DETAIL

SCALE: N.T.S.

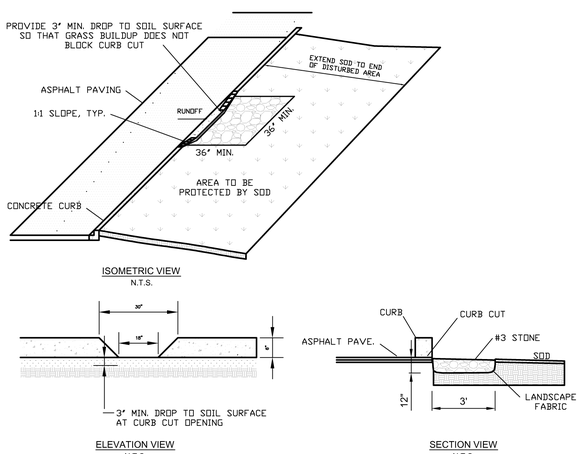

L / C-1 CURB CUT DETAIL

SCALE: N.T.S.

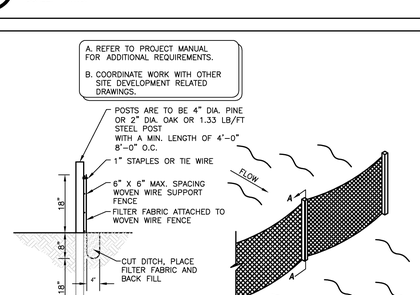

M / C-3 SILT FENCE DETAIL (TYPE 1)

SCALE: N.T.S.

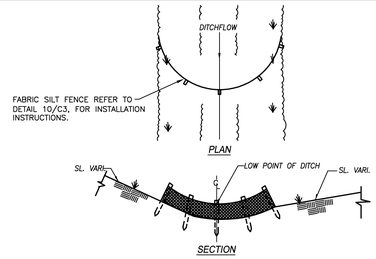

N / C-3 SILT CHECK/SILT FENCE DETAIL (TYPE 2)

SCALE: N.T.S.

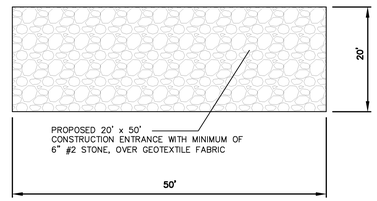

O / C-3 CONSTRUCTION ENTRANCE DETAIL

SCALE: N.T.S.

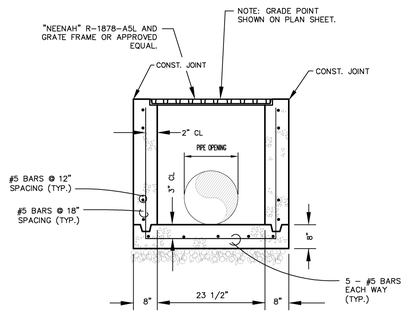

P / C-2A JUNCTION BOX DETAIL

SCALE: N.T.S.

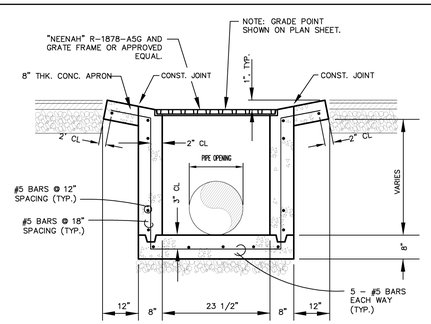

NOTE: CONTRACTOR TO VERIFY DIMENSIONS FOR COMPATIBILITY WITH CASTING.

Q / C-2A DROP BOX INLET DETAIL

SCALE: N.T.S.

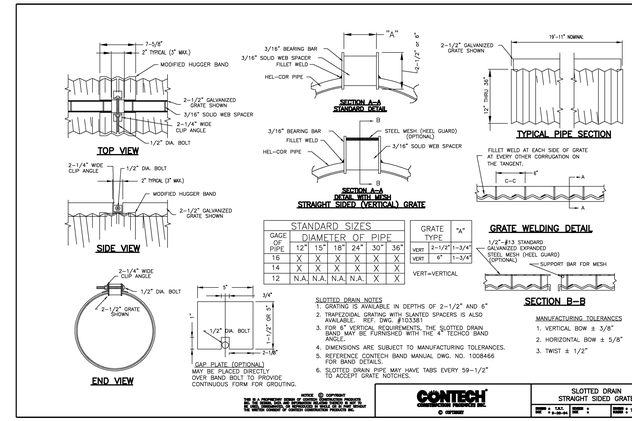

STANDARD SIZES						
GAGE OF PIPE	DIAMETER OF PIPE					
	12"	15"	18"	24"	30"	36"
16	X	X	X	X	X	X
14	X	X	X	X	X	X
12	N.A.	N.A.	N.A.	N.A.	X	X

GRATE TYPE		"A"
VERT	2-1/2"	1-3/4"
VERT	6"	1-3/4"

VERT=VERTICAL

SLOTTED DRAIN NOTES
1. GRATING IS AVAILABLE IN DEPTHS OF 2-1/2" AND 6"
2. TRAPEZOIDAL GRATING WITH SLANTED SPACERS IS ALSO AVAILABLE. REF. DWG. #10L331
3. FOR 6" VERTICAL REQUIREMENTS, THE SLOTTED DRAIN BAND MAY BE FURNISHED WITH THE 4" TECHCO BAND BAND.
4. DIMENSIONS ARE SUBJECT TO MANUFACTURING TOLERANCES.
5. REFERENCE CONTECH BAND MANUAL DWG. NO. 1008466 FOR BAND DETAILS.
6. SLOTTED DRAIN PIPE MAY HAVE TABS EVERY 59-1/2" TO ACCEPT GRATE NOTCHES.

MANUFACTURING TOLERANCES
1. VERTICAL BOW ± 3/8"
2. HORIZONTAL BOW ± 5/8"
3. TWIST ± 1/2"

NOTICE © COPYRIGHT
THIS DRAWING IS THE PROPERTY OF CONTECH CONSTRUCTION PRODUCTS INC. AND MUST BE RETURNED TO THE COMPANY UPON REQUEST. THIS DRAWING MAY NOT BE REPRODUCED IN WHOLE OR IN PART WITHOUT WRITTEN PERMISSION OF CONTECH CONSTRUCTION PRODUCTS INC.

CONTECH CONSTRUCTION PRODUCTS INC. © COPYRIGHT

SLOTTED DRAIN
STRAIGHT SIDED GRATE

R / C-2A SLOTTED DRAIN DETAIL

SCALE: N.T.S.

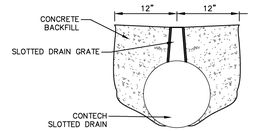

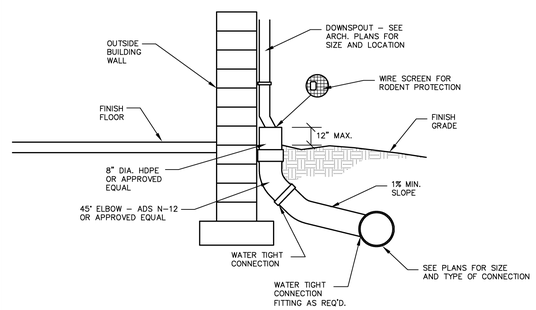

S / C-2A DOWNSPOUT COLLECTION DETAIL

SCALE: N.T.S.

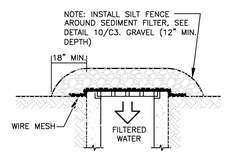

T / C-3 SEDIMENT FILTER DETAIL

SCALE: N.T.S.

GEOTECH ENGINEERING & TESTING, INC.
500 SOUTH 17th STREET PADUCAH, KY 42003 PHONE - 270.443.1995
601 NORTH 4th STREET MURRAY, KY 42071 PHONE - 270.753.7307
403 NORTH COURT STREET MARION, IL 62959 PHONE - 618.997.9190
WWW.GEOTECHENGINEERS.NET
COPYRIGHT © 2008 - GEOTECH ENGINEERING & TESTING, INC.

castleberry megregor swinford
ARCHITECTS

SITE DETAILS

BENTON GAS SYSTEMS

Project No. 10176

C-6
of 6

DATE
8-31-10